REV.	ECN NO.	DESCRIPTION	DRAW	APPD.	DATE

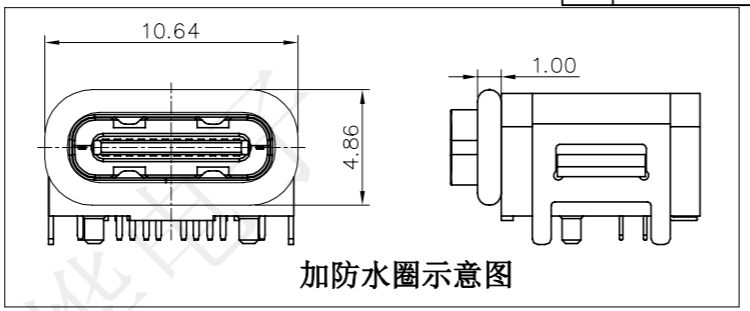

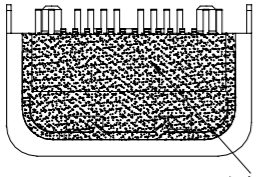

受 控 文 件

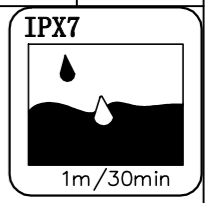

NOTE:

1.MECHANICAL PERFORMANCE,
1-1.INSERTION FORCE: 0.5~2.0kgf.
1-2.REMOVAL FORCE: 0.8kgf~2.0kgf.
1-3.DURABILITY: 10000 CYCLES.
2.ELECTRICAL PERFORMANCE,
2-1. CURRENT RATING: 3.0A
VOLTAGE RATING: 5.0V
2-2. LLCR:
VBUS & GND PINS AND OTHER PINS: 40mΩ/PIN MAX.
SHIELD: 50mΩ/MAX.
LLCR MAX. CHANGE OF ALL PINS: 10mΩ.
2-3.INSULATION RESISTANCE: 100MΩ MIN
2-4.DIELECTRIC WITHSTAND VOLTAGE,AC 100V FOR 1 MINUTE.
3. ENVIRONMENTAL PERFORMANCE:
OPERATING TEMPERATURE: -25℃~+85℃.
4.IR REFLOW:
THE PEAK TEMPERATURE ON THE BOARD SHALL BE MAINTAINED FOR 10 SECONDS AT 260℃.

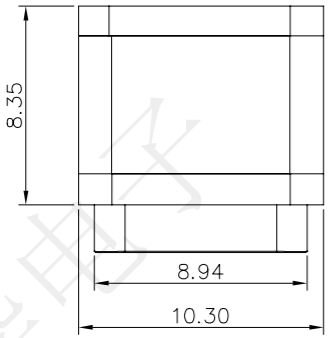

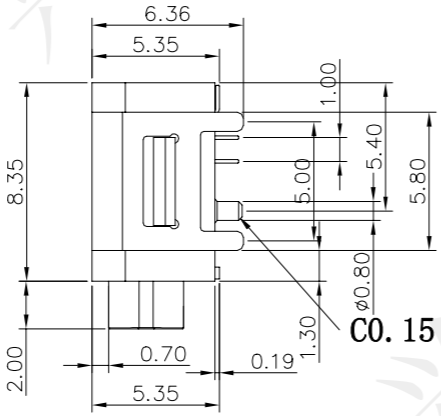

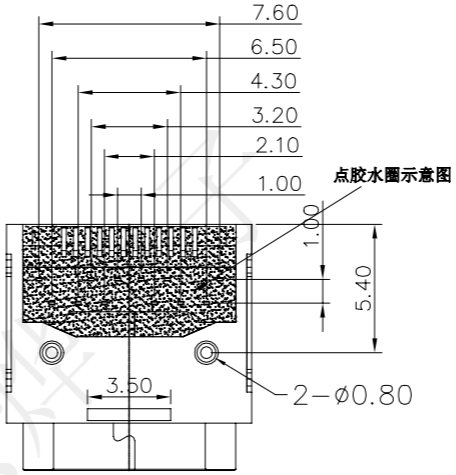

PIN NUMBER	SIGNAL NAME	PIN NUMBER	SIGNAL NAME
A1	GND	B12	GND
A2	SSTXp1	B11	SSRXp1
A3	SSTXn1	B10	SSRXn1
A4	VBUS	B9	VBUS
A5	CC1	B8	SBU2
A6	Dp1	B7	Dn2
A7	Dn1	B6	Dp2
A8	SBU1	B5	CC2
A9	VBUS	B4	VBUS
A10	SSRXn2	B3	SSTXn2
A11	SSRXp2	B2	SSTXp2
A12	GND	B1	GND

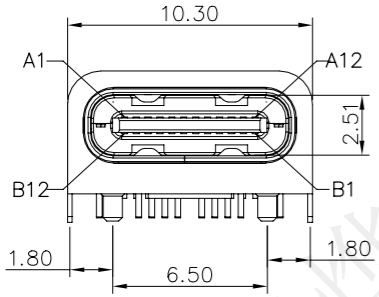

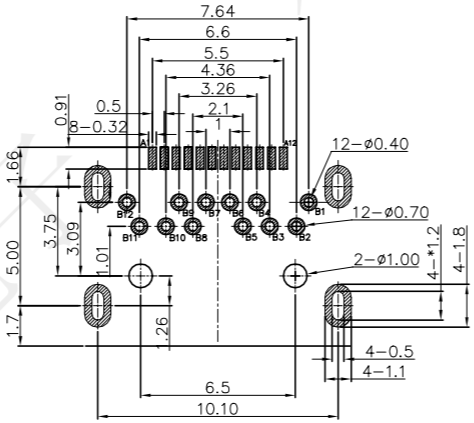

RECOMMENDED PCB LAYOUT
Tolerance: ±0.05mm

NO	DESCRIPTION	QTY	MATERIAL	REMARKS
1	Rear high	1PCS	PA10T	BLACK
2	SHELL HOUSING	1PCS	PA10T	BLACK
3	CONTACT	1SET	C7025	接触，SMT 1u"
4	Bracket	1PCS	STAINLESS STEEL	镀镍 30u"
5	SHELL	1PCS	STAINLESS STEEL	镀镍 30u"
6	Middle clip	1PCS	STAINLESS STEEL	Cleaning
7	Run-RING	1PCS	Silica gel	BLACK

深圳市兴烨电子有限公司 工程部专用章 APPROVED Xingye Technology Co.,Ltd

深圳市兴烨电子有限公司
ShenZhen XingYe Electronics co., Ltd

TOLERANCE			
X.X	±0.30	X.°	±2°
.XX	±0.20	.X°	±1°
.XXX	±0.10	.XX°	±0.5°
UNITS		mm	

APPD: 陈爱光
CHED: 施立敏
DRAW: 马洪飞

Series Name :

Product Name : TYPE-CF-24P板上四脚插有柱L10.35前插后贴12PDIP+12PSMT防水IPX-7编带带防水圈

Part N0: UCI27634

SCALE	SHEET	REV.
1:1	1/1	A1