ECN NO.	DESCRIPTION	DRAW	APPD.	DATE

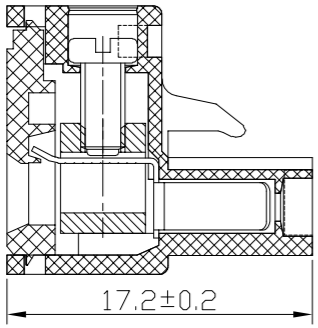

A—A

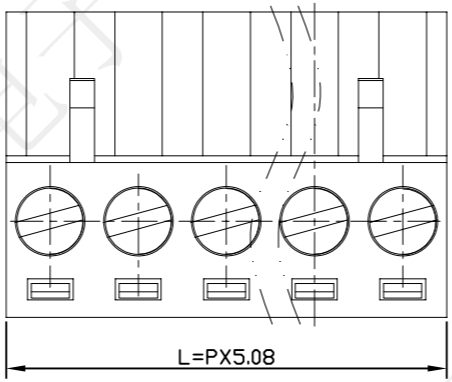

PCB LAYOUT

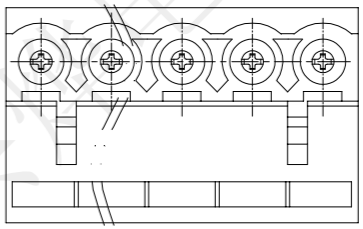

NOTES:

1. Rating:300V 15A .
2. Insulation Withstands Voltage: AC2000V/MIN
3. Using Temperature Range: -40° C+105° C
4. Suitable Electric Wire:24-12AWG
5. Pitch:5.08

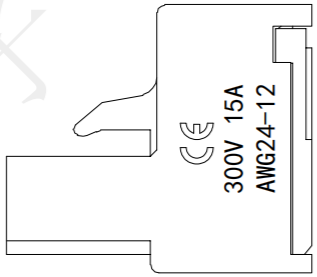

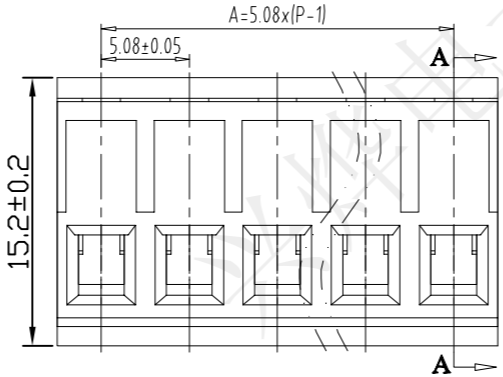

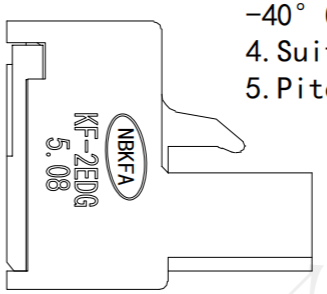

受 控 文 件

深圳市兴烨电子有限公司 工程部专用章 APPROVED ShenZhen XingYe Technology Co., Ltd

Total Pitch Tolerances in mm									Nominal dimension range in mm									⊥		⌭	—		//
over 0 to 30	over 30 to 53	over 53 to 70	over 0 to 90	over 90 to 115	over 115 to 150	over 150 to 250	over 250 to 350	over 350 to 500	over 0 to 30	over 30 to 53	over 53 to 70	over 70 to 90	over 90 to 115	over 115 to 150	over 150 to 200	over 200 to 250	over 250 to 320	over 0 to 10	over 10	all	over 0 to 100	over 100 to 150	over 150
±0.18	±0.20	±0.25	±0.3	±0.35	±0.44	±0.60	±0.70	±0.85	±0.20	±0.25	±0.30	±0.35	±0.44	±0.55	±0.70	±0.80	±0.90	0.2	0.3	0.3	0.2	0.3	0.5

深圳市兴烨电子有限公司
ShenZhen XingYe Electronics co., Ltd

TOLERANCE			
X.X	±0.30	X.°	± 2°
.XX	±0.20	.X°	± 1°
.XXX	±0.10	.XX°	±0.5°
UNITS		mm	

APPD: 陈爱光
CHED: 施立敏
DRAW: 马洪飞

Series Name : 接线柱2EDGK-5.08-nP
Product Name :
Part N0:

SCALE	SHEET	REV.
1:1	1/1	A1