REV.	ECN NO.	DESCRIPTION	DRAW	APPD	DATE

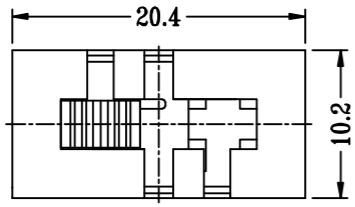

受 控 文 件

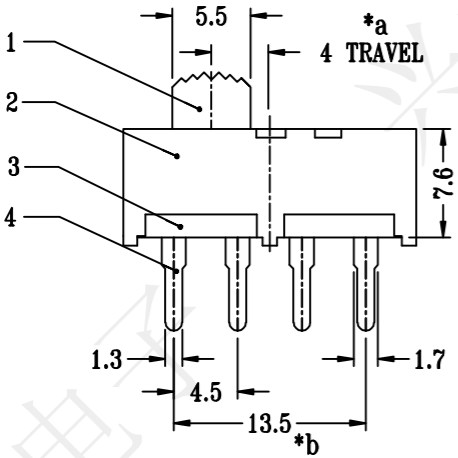

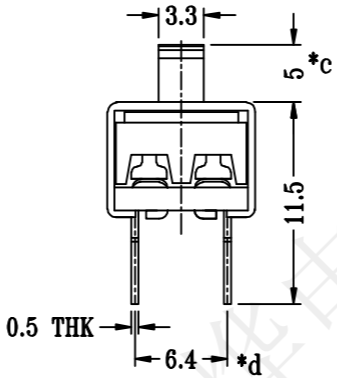

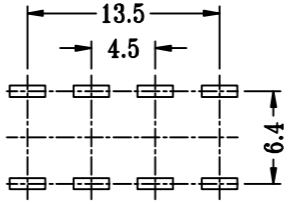

P.C.B LAYOUT
BOTTOM VIEW

注： "*"③表示关键尺寸(4个).

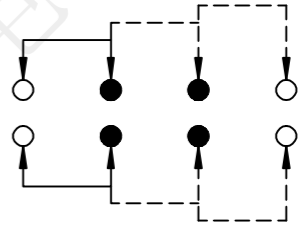

SCHEMATIC (NON-SHORTING)

深圳市兴烨电子有限公司 Xingye Technology Co., Ltd 工程部专用章 APPROVED

SPECIFICATION:
Operating temperature:-16℃~60℃
Rated loading:DC 125V 3A
Contact resistance:100mΩMax
Insulation resistance:100MΩ Min
Withstanding voltage:AC 500V（50-60Hz）/min
Electrical Life:3000 cycles
Operating force 250gf±100gf

NO.	PARTS	MATERIALS	Q'TY	FINISH
6	SPRING PLATE	PBS STRIP	3	NATURAL
5	CONTACT	COPPER STRIP	2	Ag PLATED
4	TERMINAL	COPPER STRIP	8	Ag PLATED
3	BASE	PHENOLIC RESIN	1	BLACK
2	FRAME	STEEL STRIP	1	Ni PLATED
1	KNOB	PPS	1	BLACK

深圳市兴烨电子有限公司
ShenZhen Xing Ye Electronics co., Ltd

TOLERANCE				
X.X	±0.30	X.°	±2°	APPD: 陈爱光
.XX	±0.20	.X°	±1°	CHED: 施立敏
.XXX	±0.10	.XX°	±0.5°	DRAW: 马洪飞
UNITS		mm		

Series Name :

Product Name : SS23H24-G5八脚直插耐温

Part N0: SKY10036

SCALE	SHEET	REV.
1:1	1/1	A1